ISSN 2229-5518

Numerical Study of a Three-Bed Adsorption Chiller with Different Cycles

Gulshan Khatun, Md.Zafar Iqbal Khan

Abstract— This paper deals with the numerical results of a three-bed adsorption chiller with different cycles, using mass recovery scheme is used to improve the cooling effect. In the present numerical solution, the heat source temperature variation are taken from 50°C to 70°C (for both cycle) and along with coolant inlet temperature at 30°C and the chilled water inlet temperature at 14°C. Silica gel-water is chosen as adsorbent-refrigerant pair. In the new strategy, mass recovery process occurs in all beds. In cycle1, the configuration of beds in the three bed chiller with mass recovery were taken as uniform in size but in cycle2, the configuration of Hex3 is taken as half of Hex1 or Hex2(where Hex1 and Hex2 are identical). A cycle simulation computer program is constructed to analyze the influence of operating conditions (hot and cooling water temperature) on COP (coefficient of performance), CC (cooling capacity). The performances in terms of cooling capacity (CC) and coefficient of performances (COP) are compared with those of conventional three-bed mass recovery scheme. Results show that the cooling capacity (CC) and coefficient of performance (COP) of the proposed cycle1 is much better than that of the proposed cycle2 in the range of heat source temperature from 50°C to 70°C.

Keyword- Adsorption Chiller, Silica gel-water, Mass Recovery, Renewable Energy Sources.

1. INTRODUCTION

To improve the coefficient of performance, Shelton et al. [1] proposed a thermal wave regenerative adsorption heat pump system. Wang [2] showed that mass recovery process is very effective for the high evaporating pressure lift as well as for the low regenerating temperature. Alam et al. [3] analyzed four-bed mass recovery cycle with silica gel/water pair employing a new strategy to improve the cooling effect. Recently, Saha et al.[4] analyzed a dual-mode, multi-bed adsorption chiller to improve the heat recovery efficiency.

The performance of the adsorption refrigeration cycle can be enhanced by applying a mass recovery cycle into the adsorption cycle. The advanced mass recovery cycle was also applied to a three-bed cycle. Recently, Khan et al. [5] studied experimentally on a three-bed adsorption chiller and reported that it provided better COP values for 65-75^{0}C heat source temperature.

- *Gulshan Khatun is currently affiliated in Eastern University, Dhaka, Bangladesh , E-mail: gulshan@easternuni.edu.bd*
- *Md.Zafar Iqbal Khan is currently affiliated in Bangladesh University of Engineering & Technology, Dhaka, Bangladesh, E-mail: zikhan@math.buet.ac.bd*

Most of the research in this field focuses on developing advanced cycles in order to improve chiller performance to be competitive with other systems. Silica gel-water is widely used as an adsorbent-adsorbate pair in adsorption refrigeration system. Compared to other adsorbents, silica gel can be regenerated at a relatively low temperature that is below 100^{0}C. It also has a large uptake capacity for adsorption of water up to 35%-40% of its dry mass, which has a high latent heat of evaporation. Because of the low regeneration temperature, a silica gel-water adsorption chiller can utilize industrial waste heat or renewable energy resources in Chu et al. [6] and Ng et al. [7].

The primary objective of the study is to determine the numerical result of a three-bed (unequal) adsorption chiller with mass recovery. A cycle simulation computer program is constructed to analyze the influence of operating conditions (hot and cooling water temperature) on COP (Coefficient of Performance), CC (Cooling Capacity) and chilled water outlet temperature.

2. WORKING PRINCIPLE OF THE MASS RECOVERY CHILLER

ISSN 2229-5518

The schematic diagram and time allocation of the proposed three-bed mass recovery chiller are shown in Fig. 1(a) & Fig. 1(b) and Table 1, respectively. The three-bed mass recovery chiller comprises with three sorption elements (adsorber/desorber heat exchangers), a condenser, an evaporator, and metalic tubes for hot, cooling and chilled water flows as shown in Fig. 1(a) & Fig. 1(b).

Operational strategy of the proposed chiller is shown in Table. 1. In proposed design, mass recovery process occurs in all bed. To complete a full cycle for the proposed system, the chiller needs 20 modes, namely A, B, C, D, E, F, G, H, I, J, K, L, M, N,O, P, Q, R, S and T as can be seen from Table. 1.

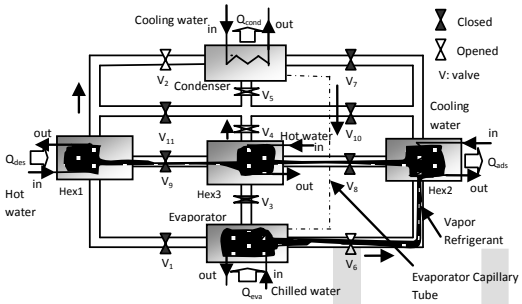

Fig. 1(a): Schematic of three bed chiller with mass recovery (proposed cycle1).

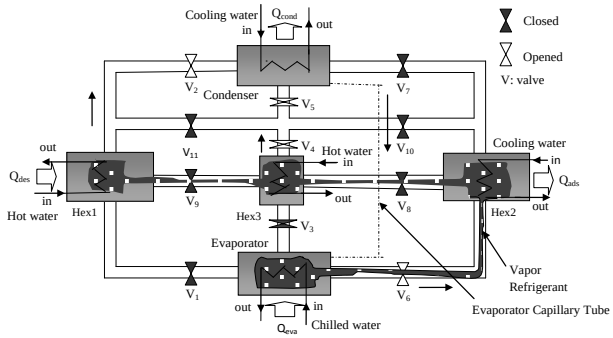

Fig. 1(b): Schematic of three bed chiller with mass recovery (proposed cycle2).

TABLE 1 OPERATIONAL STRATEGY OF THREE BED CHILLER WITH MASS RECOVERY

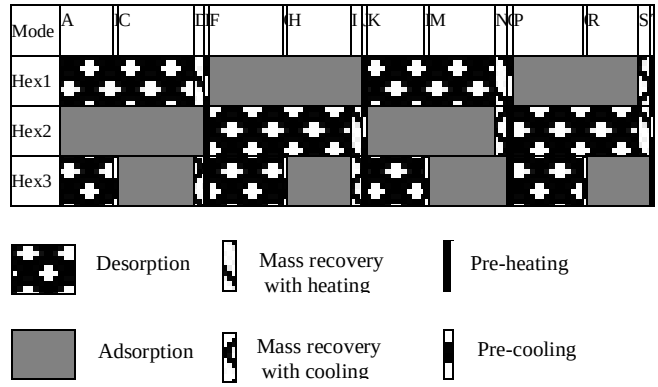

In mode A, Hex1 and Hex3 work as desorber. The desorption-condensation process takes place at condenser pressure (P_{cond}). The desorber (Hex1, Hex3) is heated up to temperature (T_{des}) by heat input $Q_{des,}$ provided by the driving heat sources. The resulting refrigerant is cooled down by temperature (T_{cond}) in the condenser by the cooling water, which removes condensation heat, $Q_{cond.}$ Hex2 works as adsorber in mode A. In the adsorption-evaporation process, refrigerant (water) in evaporator is evaporated at evaporation temperature, $T_{eva,}$ and seized heat, Q_{eva} from chilled water. The evaporated vapor is adsorbed by adsorbent (silica gel), at which cooling water removes the adsorption heat, $Q_{ads.}$ Mode B is the pre-cooling process for Hex3. In pre-cooling process, Hex3 is isolated from evaporator, condensed or any other beds. Cooling water is supplied to the bed for short time (30s) in this period. Hex1 works as desorber and Hex2 works as adsorber in mode B also. Mode C is the adsorption process for Hex3, Hex2 and desorption process for Hex1. In mode D, Hex3 (at the end position of adsorption-evaporation process) and Hex1 (at the end position of desorption-condensation process) are connected with each other continuing cooling water and hot water, respectively that can be classified as two-bed mass recovery process. This time Hex3 is isolated from evaporated and Hex1 is isolated from condensed. Here mass recovery occurs only bed to bed. In this mode Hex2 works as adsorber. When the concentration levels of both beds Hex1 and Hex3 reach in nearly equilibrium levels, then warm up process will start, called mode E (pre-heating or pre-cooling).

In mode E, Hex2 and Hex3 are heated up by hot water, and Hex1 is cooled down by cooling water. When the pressure of Hex2 and Hex3 are nearly equal to the pressure of condenser then Hex2 and Hex3 are connected to condenser. When the pressure of Hex1 is nearly equal to the pressure of evaporator then Hex1 is connected to evaporator. In mode F, Hex2 and Hex3 work as desorber and Hex1 works as adsorber. Mode G is the pre-cooling process for Hex3. In

this mode, Hex2 works as desorber and Hex1 works as adsorber. Mode H is the adsorption-evaporation process for Hex1 and Hex3. Hex2 works as desorber in this mode. In mode I, Hex3 (at the end position of adsorption-evaporation process) and Hex2 (at the end position of desorption-condensation process) are connected with each other continuing cooling water and hot water, respectively that can be classified as two-bed mass recovery process. When the concentration levels of both beds Hex3 and Hex2 reach in nearly equilibrium levels, then warm up process will start, called mode J (pre-heating or pre-cooling). Hex1 works as adsorber in this mode. Mode J is the pre-heating/pre-cooling process for all bed. In this period, Hex1 and Hex3 are heated up by hot water; Hex2 is cooled down by cooling water. Modes K, L and M are same as modes A, B and C respectively. In mode K, L and M Hex1 and Hex3 work as desorber and Hex2 works as adsorber. The mode N is same as mode D. In these modes, Hex2 (at the end position of adsorption-evaporation process) and Hex1 (at the end position of desorption-condensation process) are connected with each other continuing cooling water and hot water respectively. In this mode Hex3 works as adsorber. When the concentration levels of both beds Hex1 and Hex2 reach in nearly equilibrium levels, then warm up process will start, called mode O (pre-heating or pre-cooling). The mode O is same as mode E. Modes P, Q and R are same as modes F, G and H respectively. In mode P, Q and R, Hex2 and Hex3 work as desorber and Hex1 works as adsorber. The mode S is same as mode I. In mode S, Hex1 (at the end position of adsorption-evaporation process) and Hex2 (at the end position of desorption-condensation process) are connected with each other continuing cooling water and hot water, respectively that can be classified as two-bed mass recovery process. When the concentration levels of both beds Hex1 and Hex2 reach in nearly equilibrium levels, then warm up process will start, called mode T (pre-heating or pre-cooling). Hex3 works as adsorber in this mode. Mode T is the pre-heating/pre-cooling process for all bed. In this period, Hex1 and Hex3 are heated up by hot water; Hex2 is cooled down by cooling water. Mode T is the last process for all beds, after this mode, all beds will return to its initial position (Mode A). That's why to complete one cycle, it needs 20 modes.

3. MATHEMATICAL FORMULATION

The heat transfer and energy balance equations for the adsorbent bed can be described as follows:

$$T_{w,\,out} = T_{hex} + \left(T_{w,\,in} - T_{hex}\right)\exp\left(-\frac{U_{hex}A_{hex}}{\dot{m}_w C_{pw}}\right) \tag{1}$$

$$\begin{aligned}\frac{d}{dt}\left\{\left(W_s\left(C_{ps} + C_{pw}q\right) + W_{khex}C_{pcu} + W_{fhex}C_{pAl}\right)T_{hex}\right\} &= W_s Q_{st}\frac{dq}{dt} \\ -\delta W_s C_{pw}\left\{\gamma\left(T_{hex} - T_{eva}\right) + \left(1-\gamma\right)\left(T_{hex} - T_{wv}\right)\right\}\frac{dq}{dt} \\ + \dot{m}_w C_{pw}\left(T_{w,\,in} - T_{w,out}\right)\end{aligned} \tag{2}$$

where, δ is either 0 or 1 depending whether the adsorbent bed is working as desorber or adsorber and γ is either 1 or 0 depending on whether the bed is connected with evaporator or another bed.

The heat transfer and energy balance equations for evaporator can be expressed as:

$$T_{chill,\,out} = T_{eva} + \left(T_{chill,\,in} - T_{eva}\right)\exp\left(-\frac{U_{eva}A_{eva}}{\dot{m}_{chill} C_{p,chill}}\right) \tag{3}$$

$$\begin{aligned}\frac{d}{dt}\left\{\left(W_{eva,w}C_{pw} + W_{eva}C_{p,eva}\right)T_{eva}\right\} &= -L\,W_s\frac{dq_{ads}}{dt} \\ -W_s C_{pw}\left(T_{cond} - T_{eva}\right)\frac{dq_{des}}{dt} \\ + \dot{m}_{chill} C_{p,chill}\left(T_{chill,\,in} - T_{chill,out}\right)\end{aligned} \tag{4}$$

The heat transfer and energy balance equations for condenser can be written as:

$$T_{cond,\,out} = T_{cond} + \left(T_{cw,\,in} - T_{cond}\right)\exp\left(-\frac{U_{cond}A_{cond}}{\dot{m}_{cw} C_{pw}}\right) \tag{5}$$

$$\begin{aligned}\frac{d}{dt}\left\{\left(W_{cw,w}C_{pw} + W_{cond,hex}C_{p,cond}\right)T_{cond}\right\} &= \\ -L\,W_s\frac{dq_{des}}{dt} - W_s C_{p,w}\left(T_{des} - T_{cond}\right)\frac{dq_{des}}{dt} \\ + \dot{m}_{cw} C_{pw}\left(T_{cw,\,in} - T_{cw,out}\right)\end{aligned} \tag{6}$$

The mass balance for the refrigerant can be expressed as:

$$\frac{dW_{eva,w}}{dt} = -W_s\left(\frac{dq_{des-cond}}{dt} + \frac{dq_{eva-ads}}{dt}\right) \tag{7}$$

where, the subscripts *des-cond* and *eva-ads* stand for the vapor flow from desorber to condenser and evaporator to adsorber, respectively.

4. MEASUREMENT OF THE SYSTEM PERFORMANCE

ISSN 2229-5518

The performance of a three-bed adsorption chiller with mass recovery is mainly characterized by cooling capacity (CC) and coefficient of performance (COP) and can be measured by the following equations:

Cooling Capacity (CC) =

$$\frac{\dot{m}_{chill} C_w \int_0^{t_{cycle}} \left(T_{chill,in} - T_{chill,out}\right) dt}{t_{cycle}}$$

Coefficient of Performance (COP) =

$$\frac{\dot{m}_{chill} C_w \int_0^{t_{cycle}} \left(T_{chill,in} - T_{chil,out}\right) dt}{\dot{m}_{hot} C_w \int_0^{t_{cycle}} \left(T_{hot,in} - T_{hot,out}\right) dt}$$

5. RESULTS AND DISCUSSION

In the present analysis, a cycle simulation computer program is developed to predict the performance of the three-bed chiller with mass recovery. The systems of differential equations (1)-(7) are solved by finite difference approximation with a time step 1 sec. In the numerical solution of the differential equations, successive substitutions of the newly calculated values were used, with the iterative loop repeating the calculations until the convergence test is satisfied. The convergence factor for all parameters of the present study will be taken as 10^{-3}.

The base line parameters and standard operating conditions for the chiller operation are listed in Table. 2 and Table. 3, respectively.

Table 2 BASELINE PARAMETERS

Symbol	Value	Unit
A_{hex}	1.45	m²
A_{eva}	0.665	m²
A_{con}	0.998	m²
C_{ps}	924	J/kg.K
C_{pw}	4.18E+3	J/kg.K
$C_{p,chill}$	4.20E+3	J/kg.K
D_{so}	2.54E-4	m²/s
E_a	2.33E+3	J/kg
L	2.50E+6	J/kg
Q_{st}	2.80E+6	J/kg
R	4.62E+2	J/kg.K
R_p	0.35E-3	m
U_{ads}	1380	W/m²·K
U_{des}	1540	W/m²·K
U_{eva}	3550	W/m²·K
U_{cond}	4070	W/m²·K
W_s	14	kg
W_{cw}	5	kg
$C_{p,cu}$	386	J/kg.K
$C_{p,Al}$	905	J/kg.K
W_{khex}	12.67	kg
W_{fhex}	5.33	kg
$W_{eva,w}$	25	Kg

Table 3 STANDARD OPERATING CONDITION

	Temperature[⁰C]	Flow rate (Kg/s)
Hot water	50 ~ 70	0.4
Cooling water	30	0.74[=0.4(ads)+0.34(cond)]
Chilled water	14	0.11
Cycle Time	2100s=(950 ads/ des+40 mr+30ph+30pc) s×2	

ads/des = adsorption/desorption, mr = mass recovery, ph/pc = pre-heating/pre-cooling.

Table 4 COMPARISON OF THE RESULT BETWEEN TWO CYCLES

Cycle time = 2100s, Mass recovery = 40s

	Proposed Cycle1			Proposed Cycle2		
Heat Source Temperature	CC[kW]	COP[-]	$T_{chillout}$ [⁰C]	CC[kW]	COP[-]	$T_{chillout}$ [⁰C]
50	1.6332	0.4524	10.7371	1.0652	0.4128	11.9672
55	2.4351	0.5289	9.0003	1.6190	0.4853	10.7674
60	3.1288	0.5615	7.4978	2.0845	0.5130	9.7593
65	3.7298	0.5703	6.1962	2.4967	0.5248	8.8662
70	4.2444	0.5674	5.0816	2.8432	0.5247	8.1156

Figures 1-3 show the comparison of the numerical results between the proposed cycle1 and the proposed cycle 2. Both of the cycles were tested at the same conditions based

on the input parameters presented in Table 4. From the figure 2, it is clearly found that COP of the proposed cycle1 is higher than that of the proposed cycle2 if heat source temperature is 65^{0}C. It should be noted that the cooling capacity (CC) of the proposed cycle1 is much better than that of the proposed cycle 2 (see Fig.1) in the range of heat source temperature from 50 to 70^{0}C.

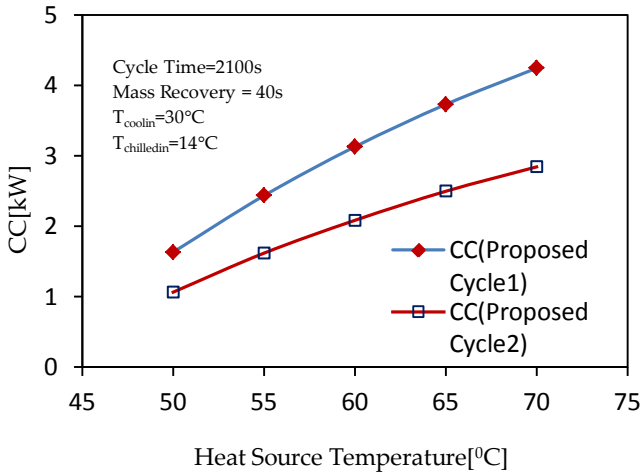

Fig. 1: Performance comparison of CC between the proposed cycle1 and cycle2.

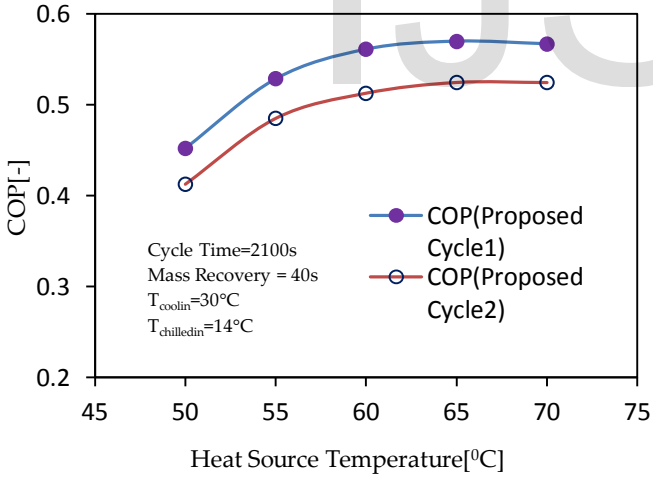

Fig. 2: Performance comparison of COP between the proposed cycle1 and cycle2.

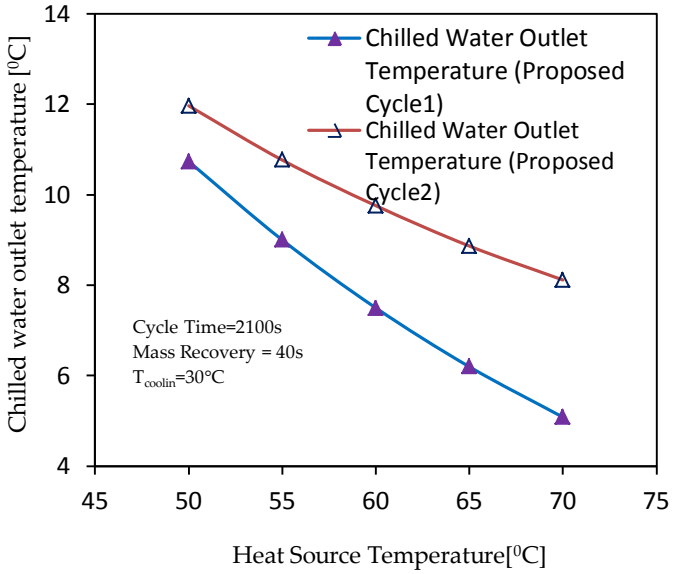

Fig. 3: Performance comparison of outlet chilled water between the proposed cycle1 and cycle2.

The ability to produce a low chilled water outlet is one of the indicators to test the performance of the new cycle. The performance of the proposed cycle1 is much better than that of the proposed cycle 2 because the chilled water outlet temperature of the proposed cycle2 is higher than that of the proposed cycle1 as shown in Figure 3. According to Figure 3, the proposed cycle1 is able to produce chilled water at lower temperature than that of the proposed cycle2.

6. CONCLUSION

The comparison of the numerical results between the proposed cycle1 and the proposed cycle 2 are discussed in this paper. Both of the cycles were tested at the same conditions based on the input parameters. The following possible outcomes can be drawn from the present analysis:

(i) The main feature of the proposed chiller is the ability to be driven by relatively low temperature heat source. The chiller can utilize the fluctuated heat source temperature between 50^0C to 70^0C to produce effective cooling along with a coolant inlet at 30^0C.

(ii) The cooling capacity (CC) and coefficient of performance (COP) of the proposed cycle1 is much better than that of the proposed cycle2 in the range of heat source temperature from 50^0C to 70^0C. The optimum COP value is obtained for hot water inlet temperature at 65^0C.

(iii) The performance of the proposed cycle1 is much better than that of the proposed cycle2 because the proposed cycle1 is able to produce chilled water at lower temperature than that of the proposed cycle 2.

ACKNOWLEDGMENT

This work was supported by Dr. Md. Zafar Iqbal Khan, Professor, Department of Mathematics, Bangladesh University of Engineering and Technology, Dhaka, Bangladesh. The work is also original except where indicated by and attached with special reference in the context.

REFERENCES

[1] S. V. Shelton, J. W. Wepfer, D. J. Miles, "Ramp Wave Analysis of the Solid/Vapor Heat Pump", ASME Journal Energy Resources Technology, vol: 112, pp: 69-78, 1990.

[2] R. Z. Wang, "Performance Improvement of Adsorption Cooling by Heat and Mass Recovery Operation", International Journal of Refrigeration, vol: 24, pp: 602-611, 2001.

[3] K. C. A. Alam, A. Akahira, Y. Hamamoto, A. Akisawa, T. Kashiwagi, "A four-bed mass recovery adsorption refrigeration cycle driven by low temperature waste/renewable heat source", Renewable Energy, vol: 29, pp: 1461-1475, 2004.

[4] B. B. Saha, S. Koyama, K. C. Ng, Y. Hamamoto, A. Akisawa, T. Kashiwagi, "Study on a dual-mode, multi-stage, multi-bed regenerative adsorption chiller", Renewable Energy, vol: 31(13), pp: 2076-2090, 2006.

[5] M. Z. I. Khan, B. B. Saha, A. Akisawa, "Experimental study on a three-bed adsorption chiller", International Journal of Air-Conditioning and Refrigeration, vol: 19(4), pp: 285-290, 2011.

[6] H. T. Chu, K. C. Ng, W. Wang, C. Yap, X. L.Wang "Transient modeling of a two-bed silica gel-water adsorption chiller", International Journal of Heat Mass Transfer, vol: 47, pp: 659-669, 2004.

[7] K. C. Ng, H. T. Chua, C. Y. Chung, C. Y. Loke, T. Kashiwagi, A. Akisawa, B. B. Saha, "Experimental investigation of the silica gel-water adsorption isotherm characteristics", Applied Thermal Engineering, vol: 21, pp:1631-1642, 2001.